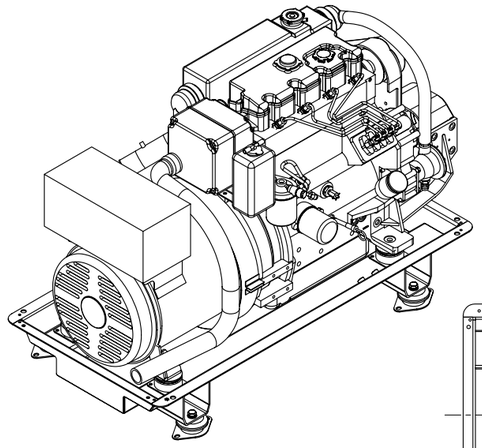

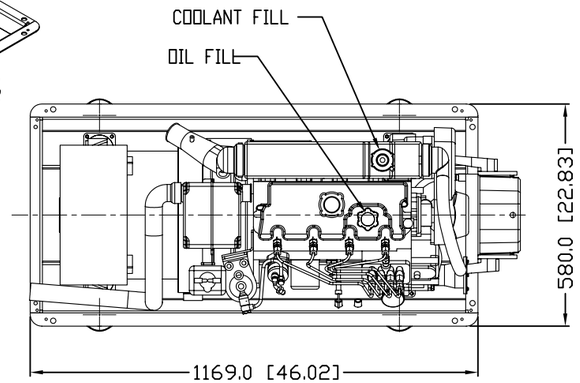

PLAN VIEW

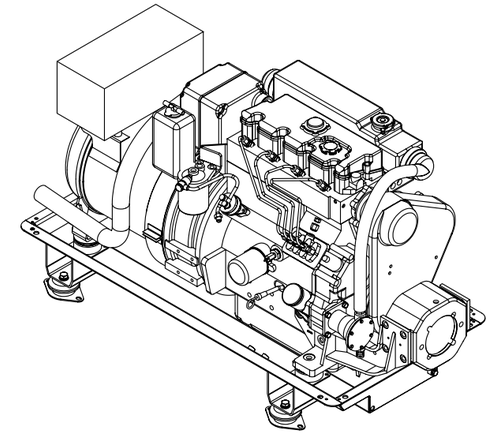

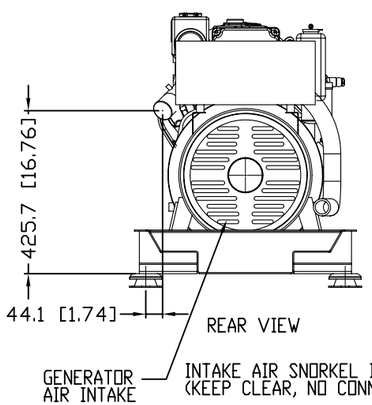

REAR VIEW

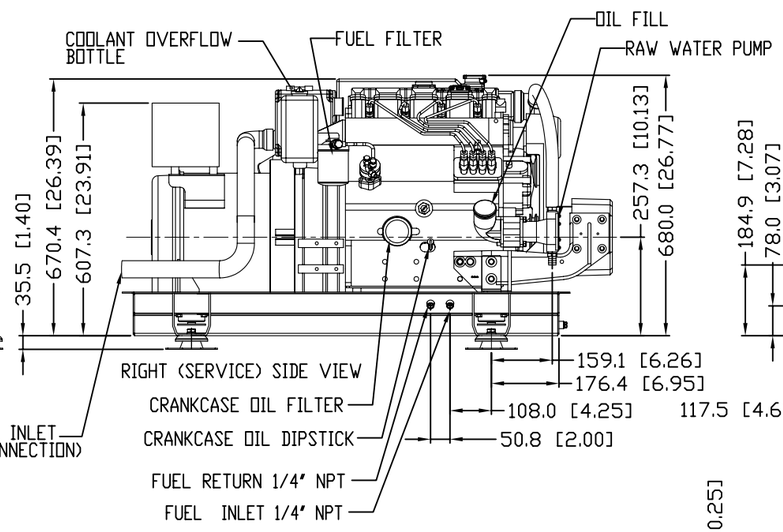

RIGHT (SERVICE) SIDE VIEW

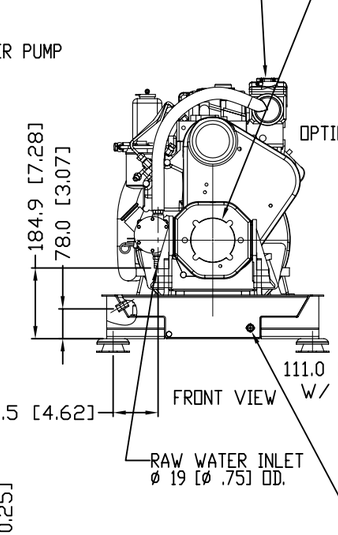

FRONT VIEW

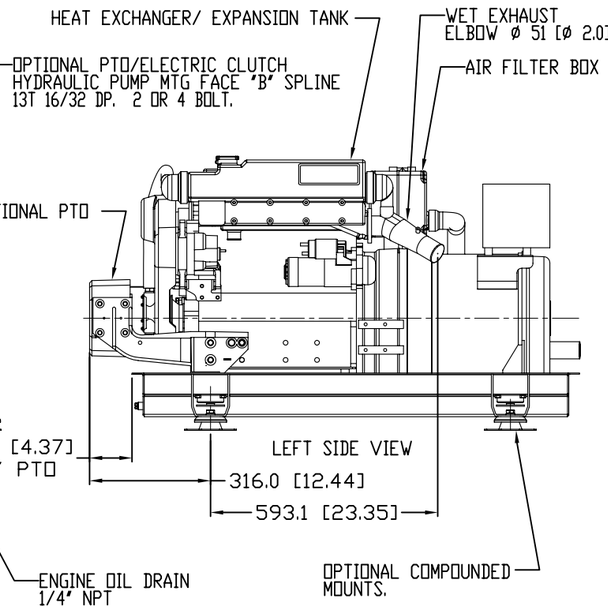

LEFT SIDE VIEW

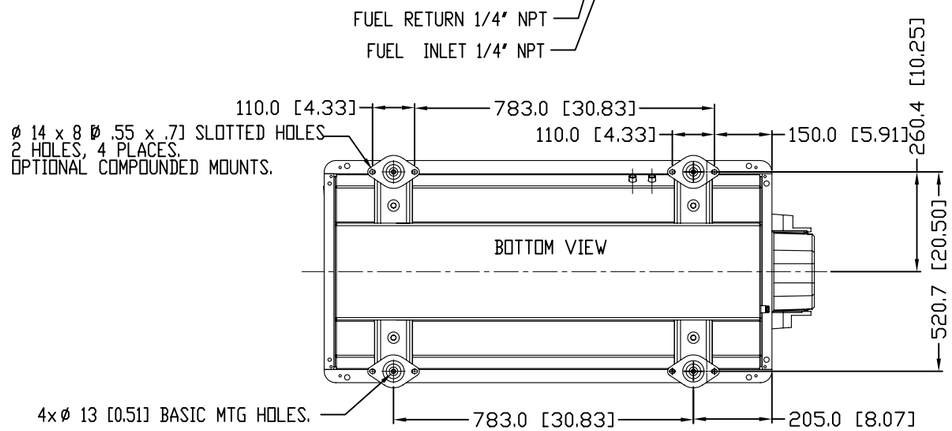

BOTTOM VIEW

TOTAL WEIGHT, WET: 407 kG [897 lbs.]
(DOES NOT INCLUDE PTO)
ADD 29.5 kG [65 lbs] FOR PTO OPTION.

THIRD ANGLE PROJECTION

PROPRIETARY AND CONFIDENTIAL
THE INFORMATION CONTAINED IN THIS DRAWING IS THE SOLE PROPERTY OF NORTHERN LIGHTS. ANY REPRODUCTION IN PART OR AS A WHOLE WITHOUT THE WRITTEN PERMISSION OF NORTHERN LIGHTS IS PROHIBITED.

NEXT ASSY	USED ON
APPLICATION	

UNLESS OTHERWISE SPECIFIED
DIMENSIONS ARE IN MILLIMETERS
TOLERANCES:
ANGULAR:
MACH ± 0.5° BEND ± 1.0°
TWO PLACE DECIMAL ± 0.5
THREE PLACE DECIMAL ± 0.3
INTERPRET GEOMETRIC TOLERANCING PER: ASME Y14.5M
MATERIAL
FINISH
DO NOT SCALE DRAWING

	NAME	DATE
DRAWN	LTP	8/12/11
CHECKED	TAH	8/15/2011
ENG APPR.		
MFG APPR.		
Q.A.		

COMMENTS:

NORTHERN LIGHTS
4420 14th AVE. N.W.
Seattle, WA 98107
(206) 789-3880
www. northern-lights.com

TITLE:
INSTALLATION DIMS
M844W3 GENSET

SIZE	DWG. NO.	REV
C	C-6892	

SCALE: 1:10 WEIGHT: SHEET 1 OF 1