SOUND SHIELD APPLICATION
M1066A1.11 1800 RPM 60Hz 130kw 3Ø
M1066A1.31 1800 RPM 60hz 130kW 1Ø
M1066A1.51 1500 RPM 50Hz 105kw 3Ø
M1066A1.71 1500 RPM 50Hz 105kw 1Ø
M1066A2.11 1800 RPM 60hz 145kW 3Ø
M1066A2.51 1500 RPM 50Hz 115kw 3Ø △
M1066A3.11 1800 RPM 60Hz 160kw 3Ø △
M1066H.11 1800 RPM 60hz 185kW 3Ø
M1066H.51 1500 RPM 50hz 155kW 3Ø

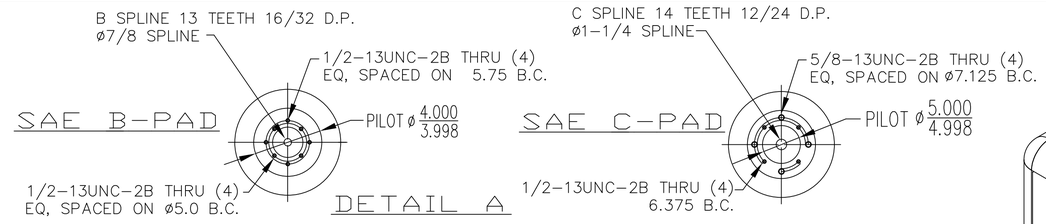

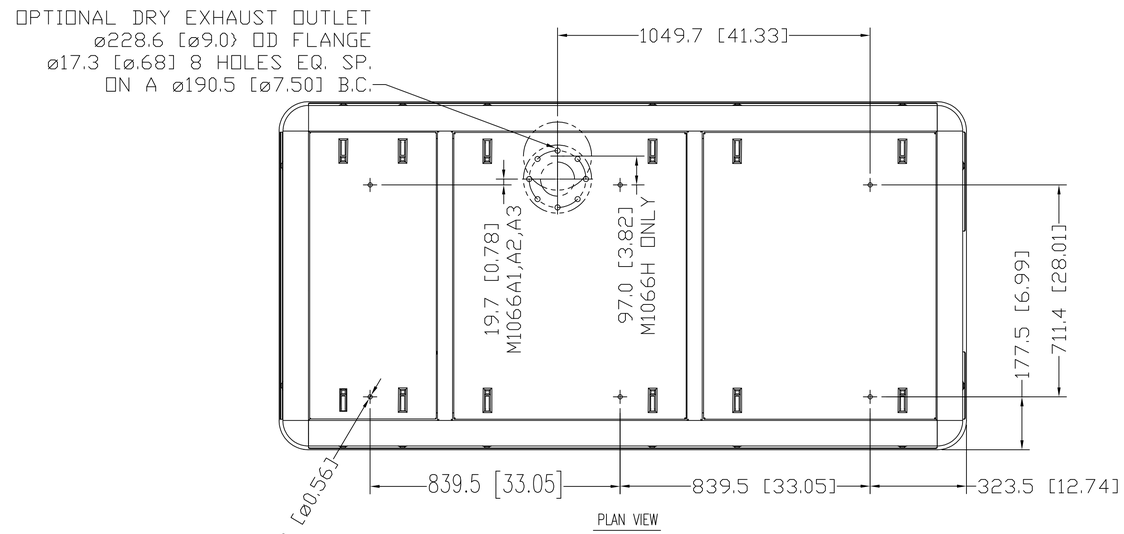

PLAN VIEW

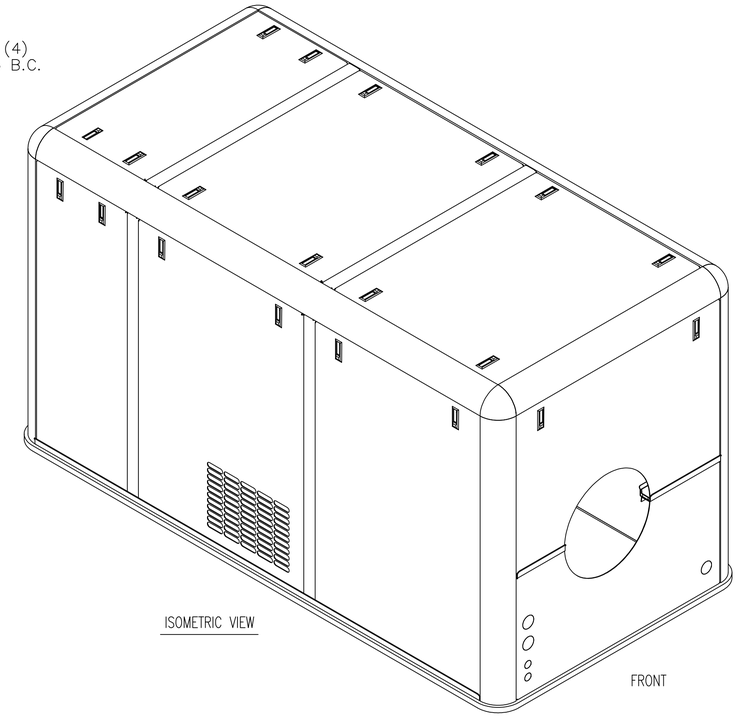

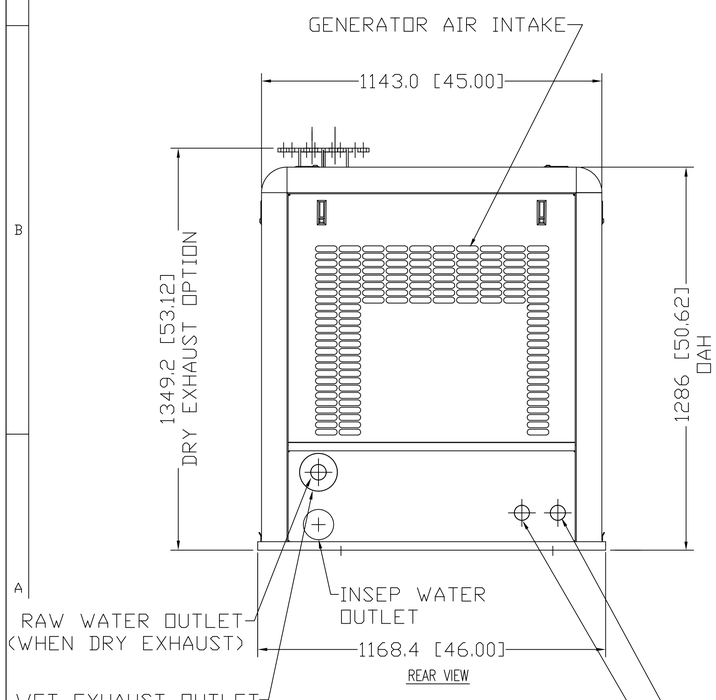

REAR VIEW

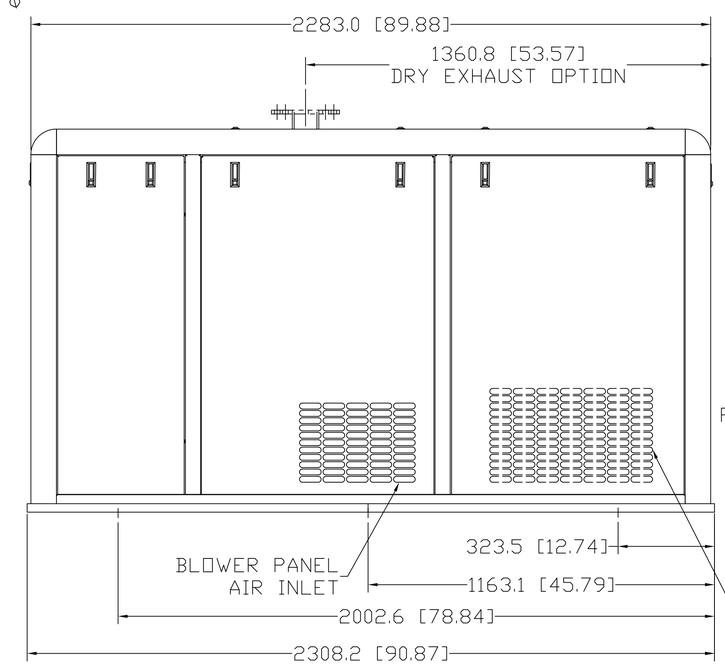

R.H. SIDE ELEVATION
(SERVICE SIDE)

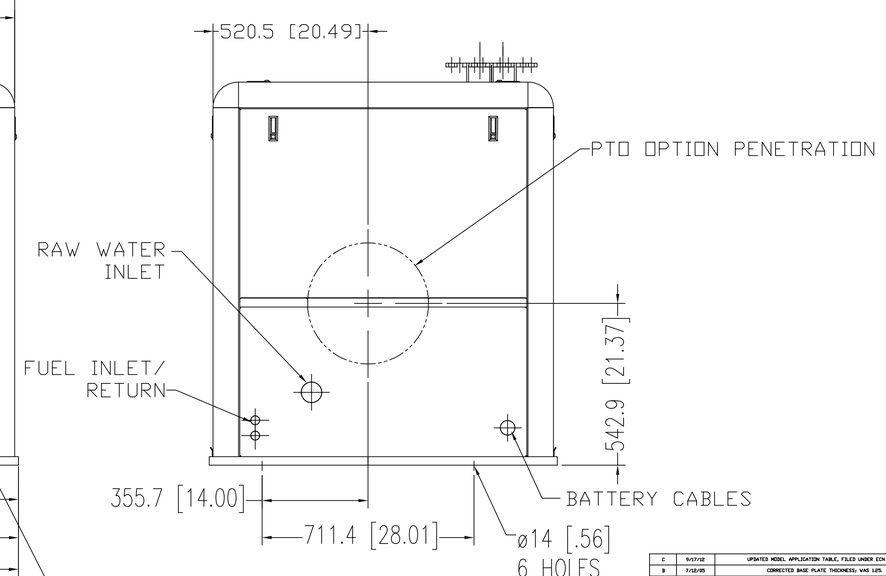

FRONT VIEW

THE DIMENSIONS ON THIS DRAWING ARE SUBJECT TO CHANGE. PLEASE CONTACT NORTHERN LIGHTS TO BE SURE YOU HAVE THE MOST CURRENT REVISION.

APPROX. WT. kg [lbs.] (SHIELD ONLY, FULLY FOAMED)
283.5 kg [625 lbs.]

WEBSITE DRAWING

PROPRIETARY AND CONFIDENTIAL
THE INFORMATION CONTAINED IN THIS DRAWING IS THE SOLE PROPERTY OF NORTHERN LIGHTS. ANY REPRODUCTION IN PART OR AS A WHOLE WITHOUT THE WRITTEN PERMISSION OF NORTHERN LIGHTS IS PROHIBITED.

REVISIONS

SYMBOL	DATE	DESCRIPTION	BY	CHECKED
C	9/17/12	UPDATED MODEL APPLICATION TABLE, FILES UNDER ECN 82248	LTP	MG 9/18/12
B	7/12/05	CORRECTED BASE PLATE THICKNESS; WAS 12ES.	LTP	
A	10/4/04	ADDED M1066A2/A2/A3 DRY EXH LOCATION.	LTP	

TOLERANCES UNLESS OTHERWISE SPECIFIED
.XX: ±
.XXX: ±
ANGULAR: ±

CAD REVISE ON CAD ONLY

THIRD ANGLE PROJECTION

NORTHERN LIGHTS®
4420 14th Avenue N.W.
Seattle, WA 98107
(206) 789-3880
www.northern-lights.com

DRAWN	LTP	3/12/03
CHECKED		
SCALE: 1/10		
RELEASED		
SHEETS: 1 OF 1		
UNITS OF MEASURE: METRIC(INCH)		

TITLE: INSTALLATION/SHIELD DIMENSIONS
M1066A/H - 431PSL SOUND SHIELD

P/N: DWG. NO: D-3693 REV: C