MODELS	APPROX WT. kg [lbs]	CENTER of GRAVITY with PMG mm [in]		
		A	B	C
M1066A2.11 1800 RPM 60Hz 145kw 3ø	1340 [3468]	194 [7.64]	29 [1.14]	14 [0.55]
M1066A3.11 1800 RPM 60Hz 160kw 3ø	1654 [3646]	129 [5.09]	25 [.98]	12 [0.47]

B

NOTE:
1) CENTER OF GRAVITY VALUES DO NOT INCLUDE PTO/CLUTCH ASSY.
2) PTO ADAPTER/CLUTCH ASSY (ONLY) WEIGHS APPROX. 96lbs (43.5 kg)
3) CUSTOMER MUST RECALCULATE CG FOR ADDITION OF HYDRAULIC PUMP.

LEGEND

ITEM	DESCRIPTION	ITEM	DESCRIPTION
1	EXPANSION TANK	12	STARTER
2	COOLANT FILL	13	DRY EXHAUST ELBOW 4" 150# STD. FLG
3	RAW WATER PUMP INLET (ø2.0 [ø51])	14	5" WET EXHAUST ELBOW (OPTION)
4	PRIMARY FUEL FILTER/WATER SEPARATOR	15	AFTERCOOLER
5	FINAL FUEL FILTER/WATER SEPARATOR	16	RAW WATER OUTLET (ø51 [2.0]) – DRY EXHAUST APPLICATION ONLY.
6	CRANKCASE OIL DIPSTICK	17	PTO/CLUTCH STD MTG FACE, SAE J744C, B OR C OR 2 OR 4 BOLT (OPTION)
7	CRANKCASE OIL FILLER	18	PMG COVER
8	CRANKCASE OIL FILTER	19	FUEL INLET / RETURN (3/8"NPT)
9	AIR INLET FILTER	20	CONNECTION FOR WATER HEATER B= HOT WATER OUT A= RETURN TO ENGINE.
10	HEAT EXCHANGER	21	ECU MODULE
11	ENGINE OIL DRAIN 1/2" NPT		

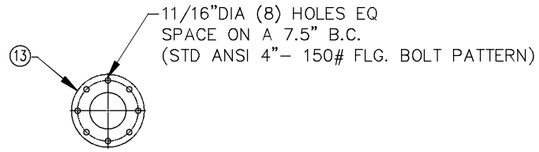

DETAIL B

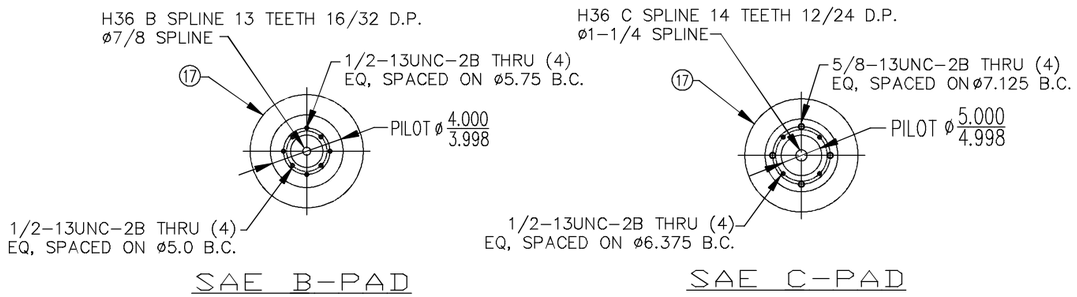

DETAIL A

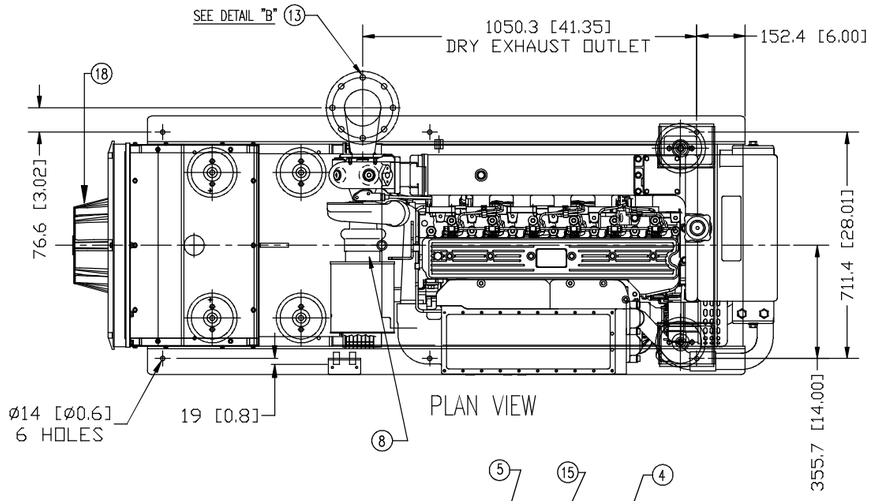

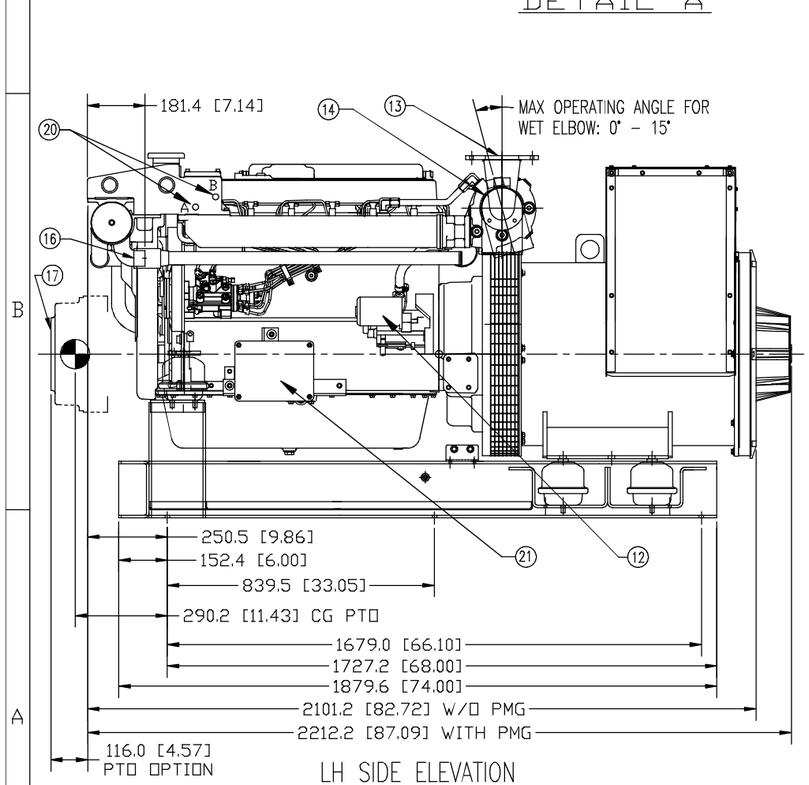

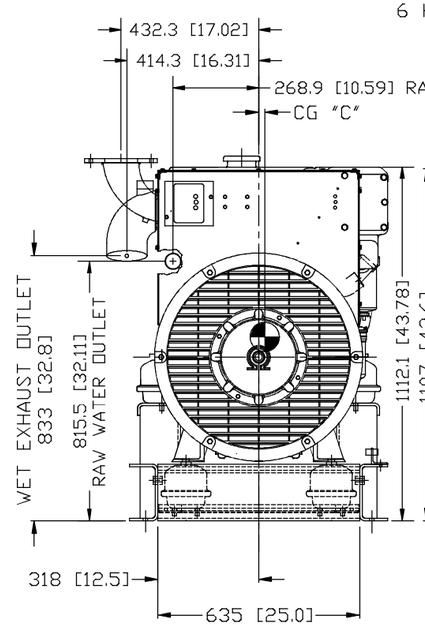

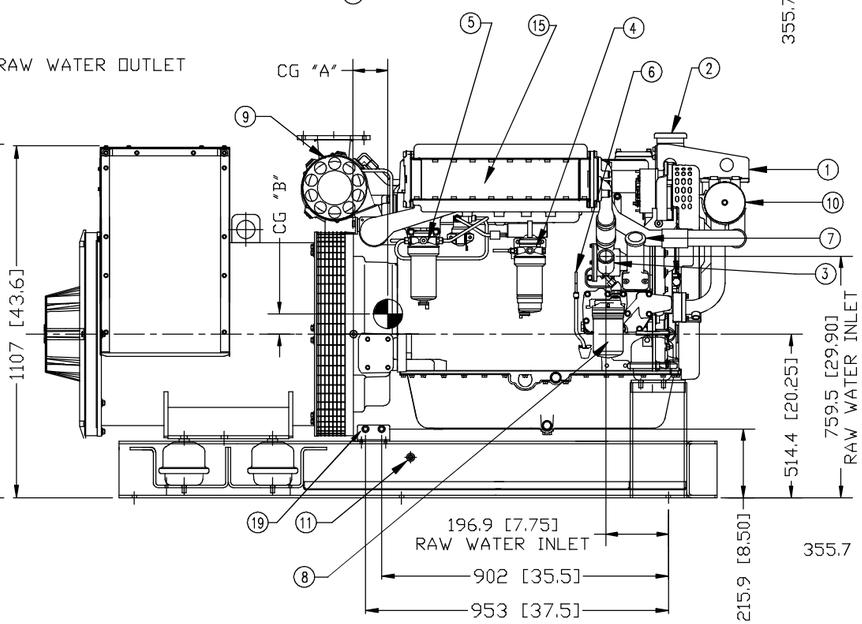

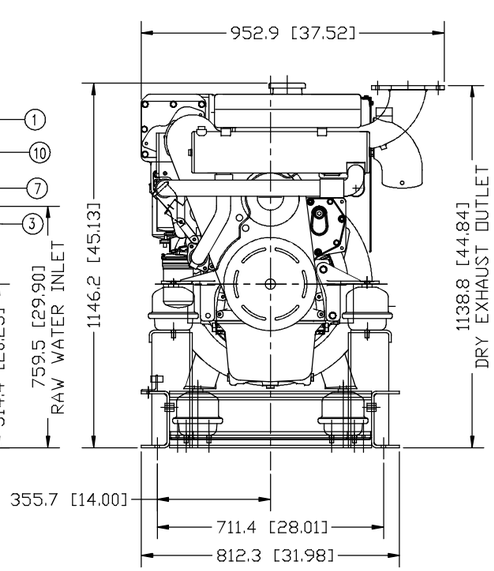

THE DIMENSIONS ON THIS DRAWING ARE SUBJECT TO CHANGE. PLEASE CONTACT NORTHERN LIGHTS TO BE SURE YOU HAVE THE MOST CURRENT REVISION.

PROPRIETARY AND CONFIDENTIAL
THE INFORMATION CONTAINED IN THIS DRAWING IS THE SOLE PROPERTY OF NORTHERN LIGHTS. ANY REPRODUCTION IN PART OR AS A WHOLE WITHOUT THE WRITTEN PERMISSION OF NORTHERN LIGHTS IS PROHIBITED.

SYMBOL	DATE	DESCRIPTION	BY	CHECKED
B	9/17/12	DELETE M1066A3.51 140 KW MODEL FROM APPLICATION TABLE, ECN#2149	LTP	MG 9/18/12
A	12/10/07	DELETED 50 HZ APPLICATION. HAS K26 (WRONG TURBO).	LTP	

DRAWN: LTP 8/2/04
CHECKED:
APPROVED:
SCALE: 1/10
RELEASED:
SHEETS: 1 OF 1
UNITS OF MEASURE: MM [IN]

NORTHERN LIGHTS
4420 14th Avenue N.W.
Seattle, WA 98107
(206) 789-3880
www.northern-lights.com

TITLE: INSTALLATION DIMENSIONS
M1066A2–A3/431 PSL – HEAT EXCHANGED/HYDRO MOUNT

P/N: | DWG. NO.: D–3737 | REV.: B