MODELS	APPROX WT. kg [lbs]	CENTER of GRAVITY with PMG mm [in]		
		A	B	C
M1066A1.51 1500 RPM 50Hz 105kw 3ø	1532 [3378]	212 [8.35]	34 [1.46]	16 [0.63]
M1066A1.71 1500 RPM 50Hz 105kw 1ø	1639 [3613]	164 [6.46]	22 [.86]	10 [0.39]
M1066A2.51 1500 RPM 50Hz 115kw 3ø	1532 [3378]	212 [8.35]	34 [1.46]	16 [0.63]

A

NOTE:
1) CENTER OF GRAVITY VALUES DO NOT INCLUDE PTO/CLUTCH ASSY.
2) PTO ADAPTER/CLUTCH ASSY (ONLY) WEIGHS APPROX. 96lbs (43.5 kg)
3) CUSTOMER MUST RECALCULATE CG FOR ADDITION OF HYDRAULIC PUMP.

LEGEND

ITEM	DESCRIPTION	ITEM	DESCRIPTION
1	EXPANSION TANK	12	STARTER
2	COOLANT FILL	13	DRY EXHAUST ELBOW 3" 150# STD. FLG
3	RAW WATER PUMP INLET (ø2.0 [ø51])	14	4" WET EXHAUST ELBOW (OPTION)
4	PRIMARY FUEL FILTER/WATER SEPARATOR	15	AFTERCOOLER
5	FINAL FUEL FILTER/WATER SEPARATOR	16	RAW WATER OUTLET (ø51 [2.0]) – DRY EXHAUST APPLICATION ONLY.
6	CRANKCASE OIL DIPSTICK	17	PTO/CLUTCH STD MTG FACE, SAE J744C, B OR C OR 2 OR 4 BOLT (OPTION)
7	CRANKCASE OIL FILLER	18	PMG COVER
8	CRANKCASE OIL FILTER	19	FUEL INLET / RETURN (3/8"NPT)
9	AIR INLET FILTER	20	CONNECTION FOR WATER HEATER B= HOT WATER OUT A= RETURN TO ENGINE.
10	HEAT EXCHANGER	21	ECU MODULE
11	ENGINE OIL DRAIN 1/2" NPT		

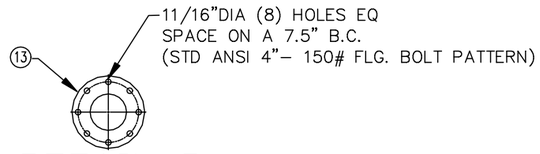

DETAIL B

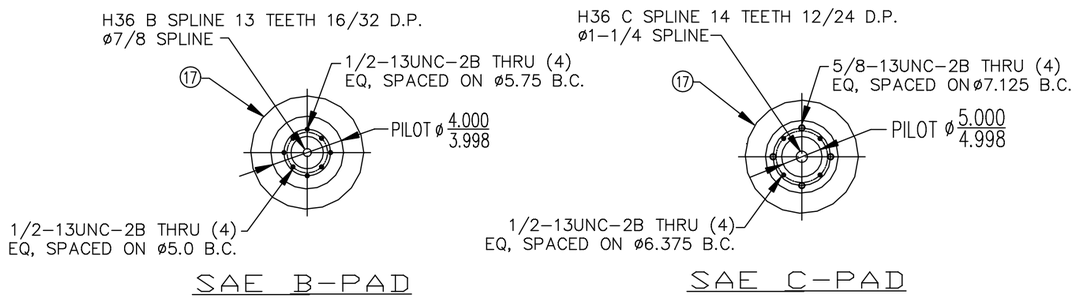

DETAIL A

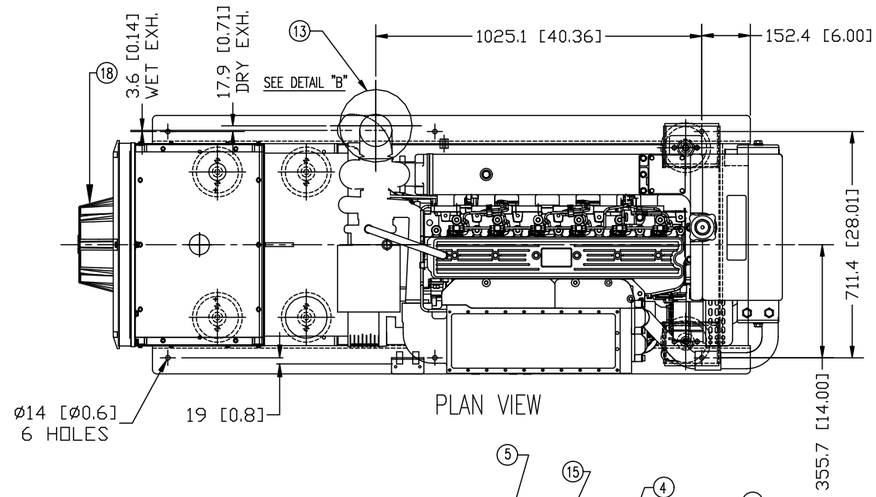

PLAN VIEW

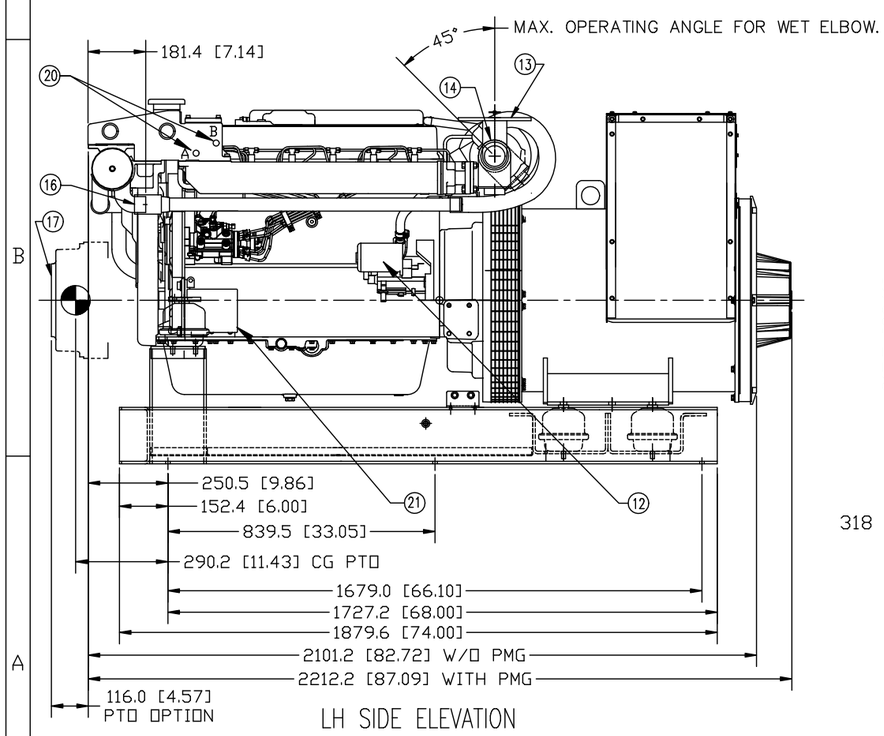

LH SIDE ELEVATION

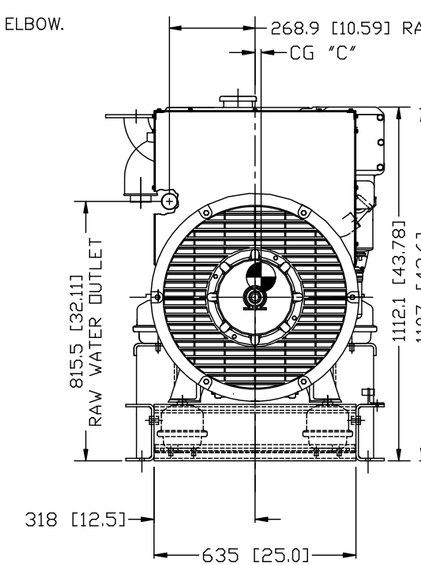

REAR VIEW

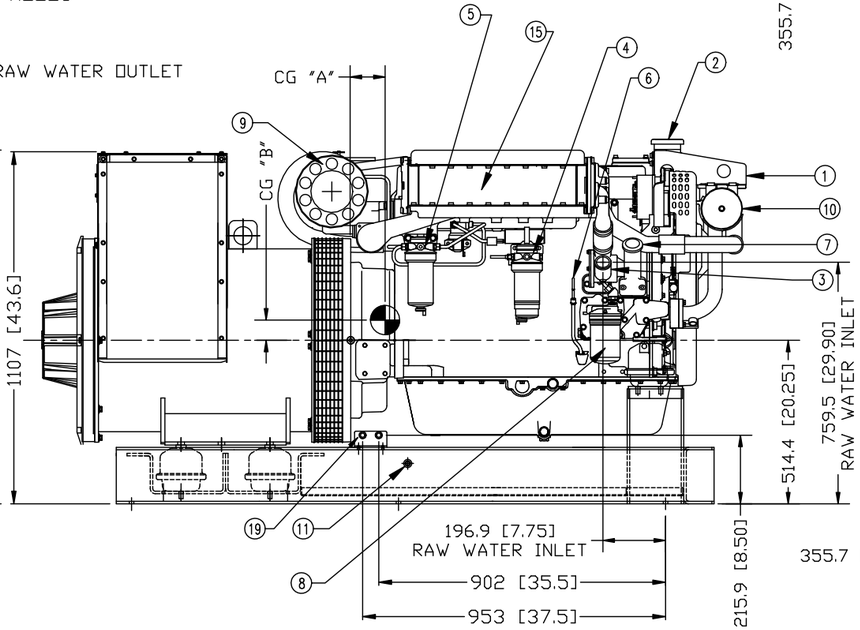

RH SIDE ELEVATION

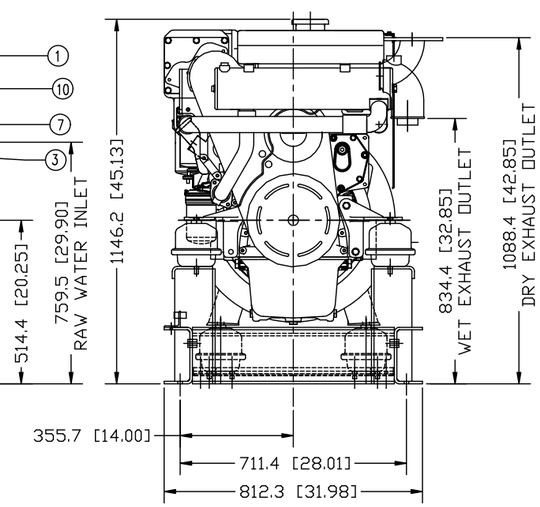

FRONT VIEW

THE DIMENSIONS ON THIS DRAWING ARE SUBJECT TO CHANGE PLEASE CONTACT ADE TO BE SURE YOU HAVE THE MOST CURRENT REVISION.

SYMBOL	DATE	DESCRIPTION	BY	CHECKED
A	4/9/08	CORRECTED WEIGHT AND CG DATA FOR M1066A2 50 HZ.	LTP	

DRAWN:	LTP	4/8/08
CHECKED:		
APPROVED:		
SCALE:	1/10	
RELEASED:		
SHEETS: 1 OF 1		
UNITS OF MEASURE:	MM [IN]	

4420 14th AVE. N.W., P.O. BOX 70543
SEATTLE, WA 98107 (206) 789-3880

TITLE: INSTALLATION DIMENSIONS
M1066A1–A2/431 PSL – HEAT EXCH/HYDROLASTIC MOUNT

P/N: | DWG. NO.: D-4281 | REV.: A