APPLICATION (GENSET +SOUND SHIELD)	WET WT lbs[kG]
M1066A1 130kW 1800 RPM 3 ø	3977 [1804]
M1066A1 130kW 1800 RPM 1 ø	4212 [191]
M1066A1 105kW 1500 RPM 3 ø	4066 [1844]
M1066A1 105kW 1500 RPM 1 ø	4212 [191]
M1066A2 145kW 1800 RPM 3 ø	4066 [1844]
M1066A2 115kW 1500 RPM 3 ø	4066 [1844]
M1066A3 160kW 1800 RPM 3 ø	4170 [1892]
M1066H 185kW 1800 RPM 3 ø	4212 [1191]
M1066H 155kW 1500 RPM 3 ø	4212 [1191]

A

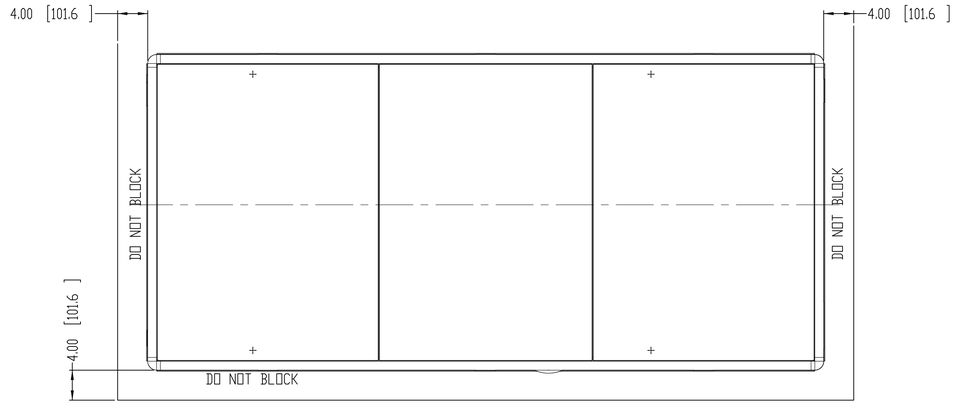

PLAN VIEW

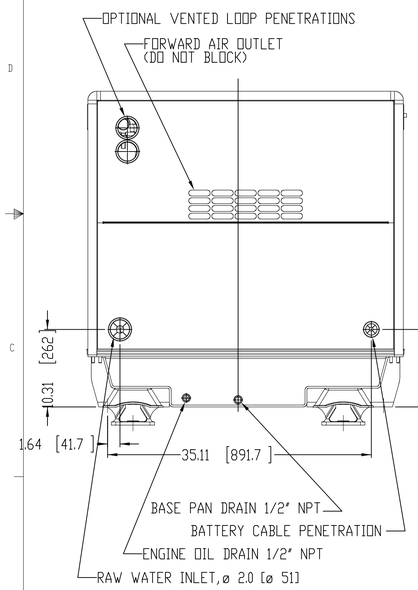

FRONT VIEW

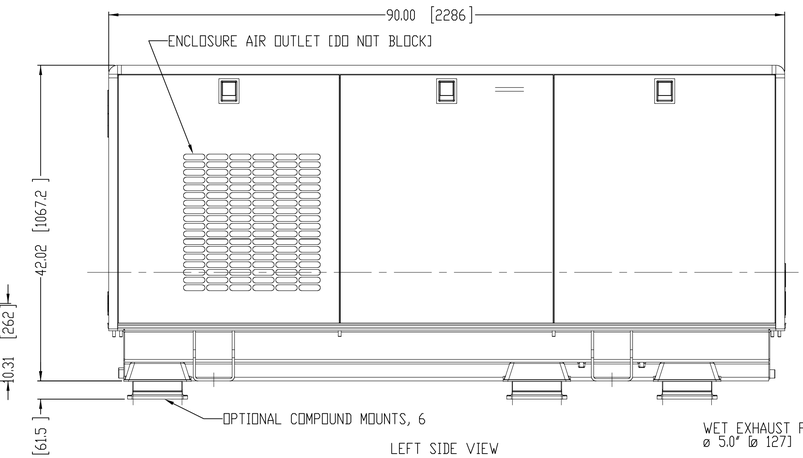

LEFT SIDE VIEW

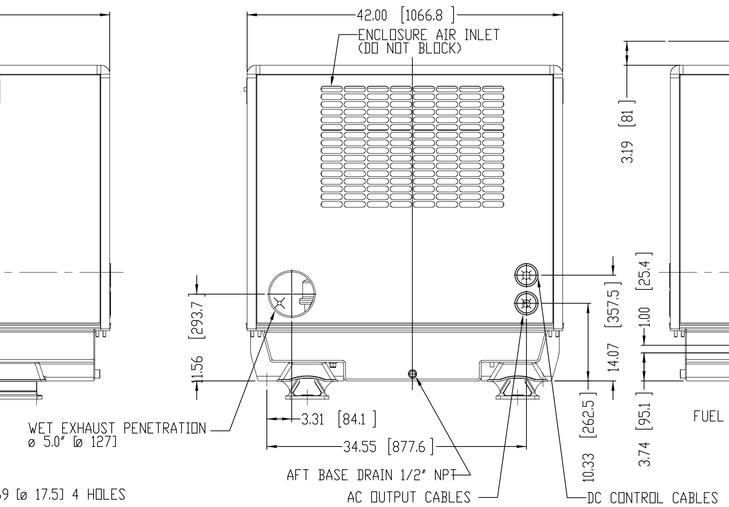

REAR VIEW

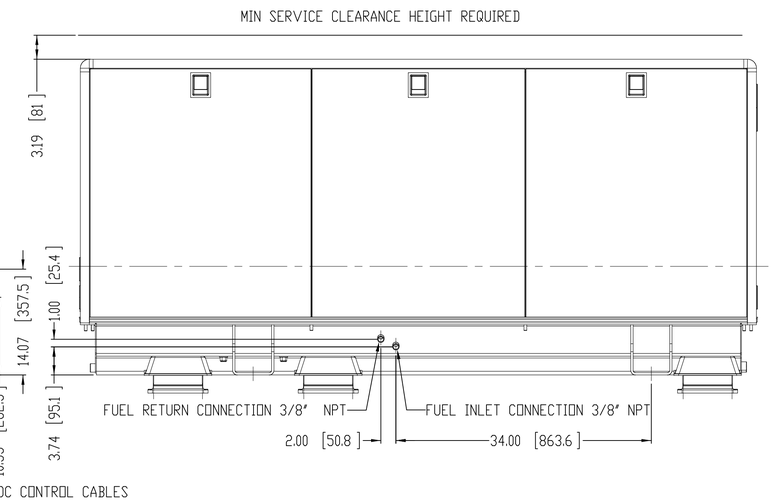

RIGHT SIDE (SERVICE) SIDE VIEW

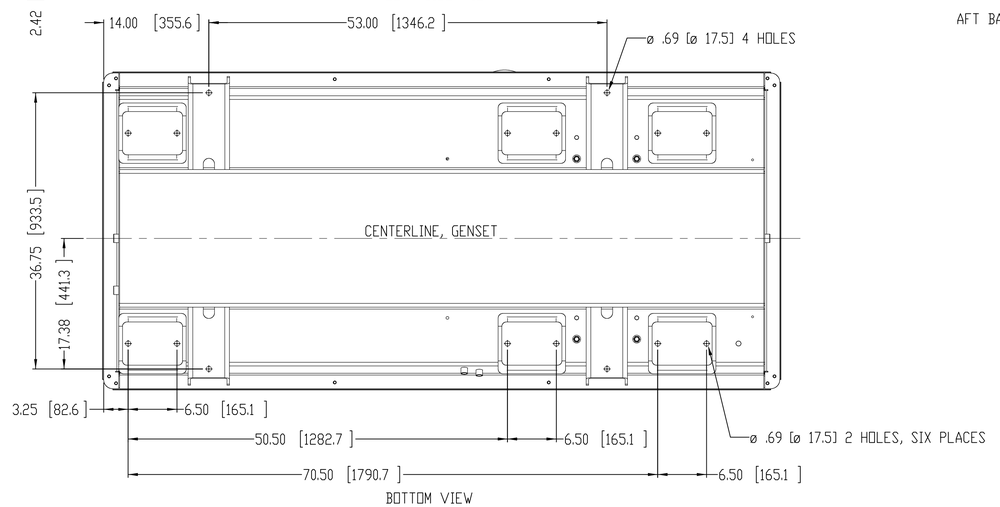

BOTTOM VIEW

REV.	DESCRIPTION	DATE	BY	CHECKED
A	ADDED APPLICATIONS TABLE WITH WEIGHT, FILED UNDER ECN #2298	3/4/2013	LTP	

REVISIONS

THIRD ANGLE PROJECTION

PROPRIETARY AND CONFIDENTIAL
THE INFORMATION CONTAINED IN THIS DRAWING IS THE SOLE PROPERTY OF NORTHERN LIGHTS. ANY REPRODUCTION IN PART OR AS A WHOLE WITHOUT THE WRITTEN PERMISSION OF NORTHERN LIGHTS IS PROHIBITED.

UNLESS OTHERWISE SPECIFIED
DIMENSIONS ARE IN MILLIMETERS
TOLERANCES:
ANGULAR:
MACH ± 0.5°
BEND ± 1.0°
X. = ± 0.5
X.X = ± 0.3
INTERPRET GEOMETRIC TOLERANCING PER: ASME Y14.5M
MATERIAL
FINISH
DO NOT SCALE

	NAME	DATE
DRAWN	LTP	1/17/13
CHECKED		
ENG APPR.		
MFG APPR.		
Q.A.		

COMMENTS:

NORTHERN LIGHTS
4420 14th AVE. N.W.
Seattle, WA 98107
(206) 789-3880
www. northern-lights.com

TITLE: INSTALLATION DIMENSIONS
M1066A/H

SIZE D | PART NO. | DWG. NO. D-4634 | REV A

SCALE: 1:10 | WEIGHT: | SHEET 1 OF 1

REV A | D-4634A | D