MODELS	APPROX WT. kg [lbs]	CENTER of GRAVITY mm [in]		
D		A	B	C
M1064H.11 1800 RPM 60Hz 99kw 3Ø	1224 [2699]	112 [4.4]	138 [5.4]	19 (0.7)
M1064H.51 1500 RPM 50Hz 90kw 3Ø	1224 [2699]	112 [4.4]	138 [5.4]	19 (0.7)

NOTES:
1. **WEIGHTS AND CG DO NOT INCLUDE PTO OPTION.**

LEGEND

ITEM	DESCRIPTION	ITEM	DESCRIPTION
1	EXPANSION TANK	12	CRANK CASE VENT SYSTEM
2	COOLANT FILL	13	DRY EXHAUST ELBOW 4" 150# STD. FLG
3	RAW WATER PUMP INLET (ø2.0 [ø51])	14	4" WET EXHAUST ELBOW (OPTION)
4	PRIMARY FUEL FILTER/WATER SEPARATOR	15	AFTERCOOLER
5	FINAL FUEL FILTER/WATER SEPARATOR	16	RAW WATER OUTLET (ø51 [2.0]) – DRY EXHAUST APPLICATION ONLY.
6	CRANKCASE OIL DIPSTICK	17	PTO/CLUTCH STD MTG FACE, SAE J744C, B OR C OR 2 OR 4 BOLT (OPTION)
7	CRANKCASE OIL FILLER	18	PMG COVER – GENERATOR w/o SOUND SHIELD.
8	CRANKCASE OIL FILTER	19	PMG COVER – FOR USE WITH SOUND SHIELD OPTION.
9	AIR INLET FILTER	20	FUEL INLET / RETURN (3/8"NPT)
10	HEAT EXCHANGER	21	CONNECTION FOR WATER HEATER B= HOT WATER OUT A= RETURN TO ENGINE.
11	ENGINE OIL DRAIN 1/2" NPT	22	ECU MODULE
		23	PTO/CLUTCH MTG FACE, D-SPLINE
		24	D.C. JUNCTION BOX 18" x 12" x 4"

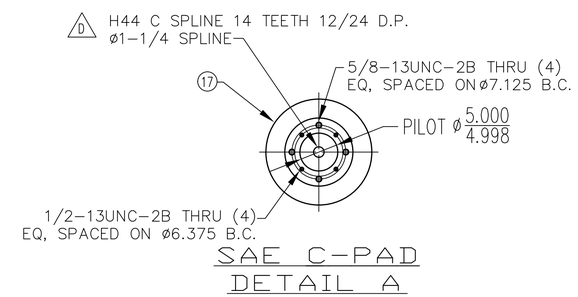

SAE C–PAD
DETAIL A

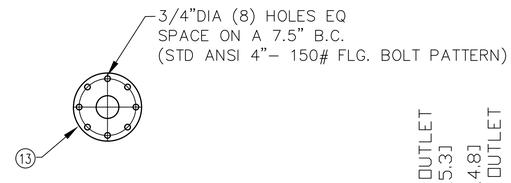

DETAIL B

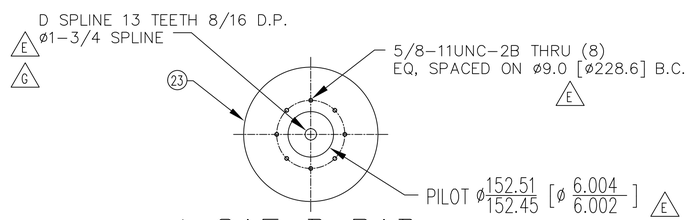

E SAE D–PAD
DETAIL C

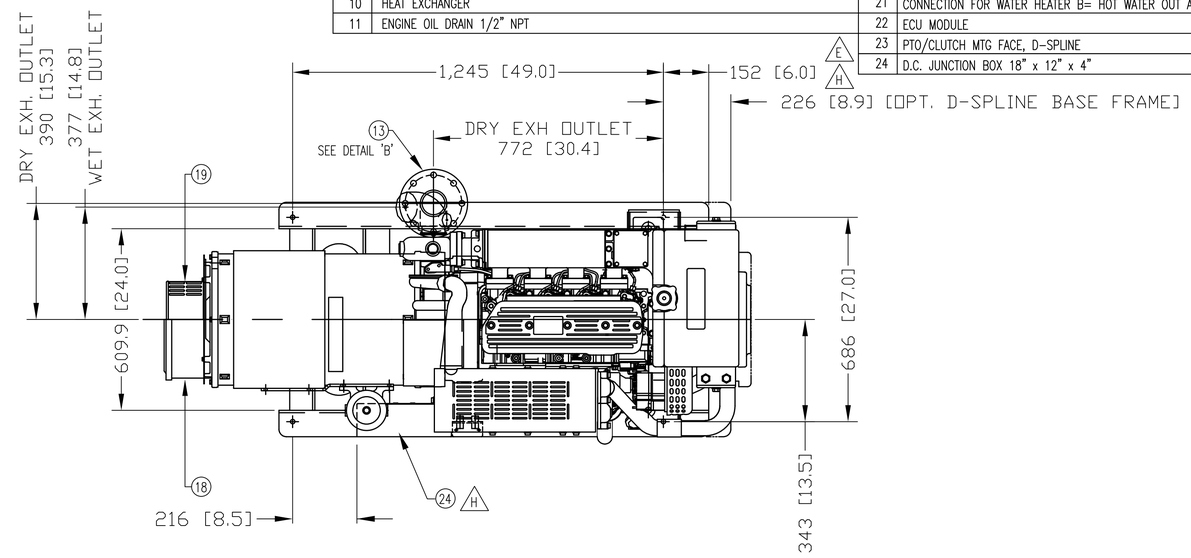

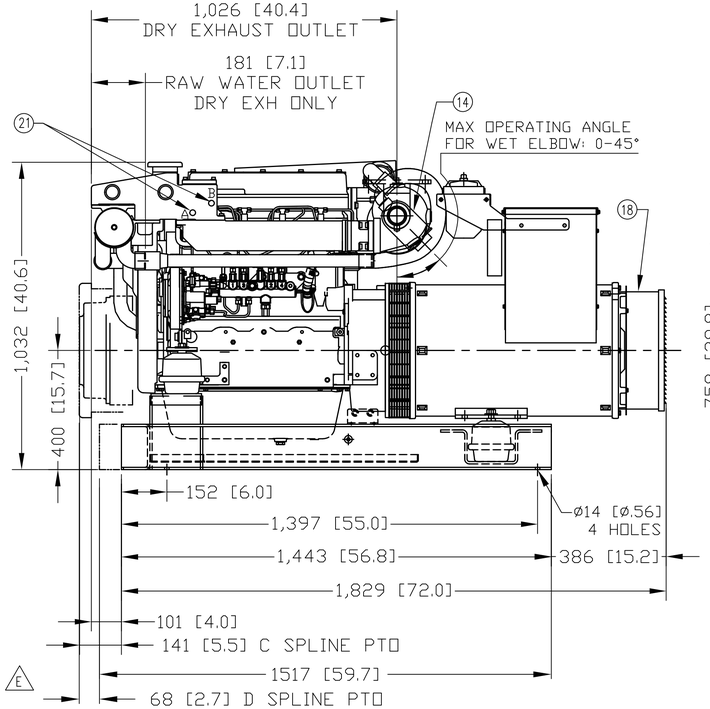

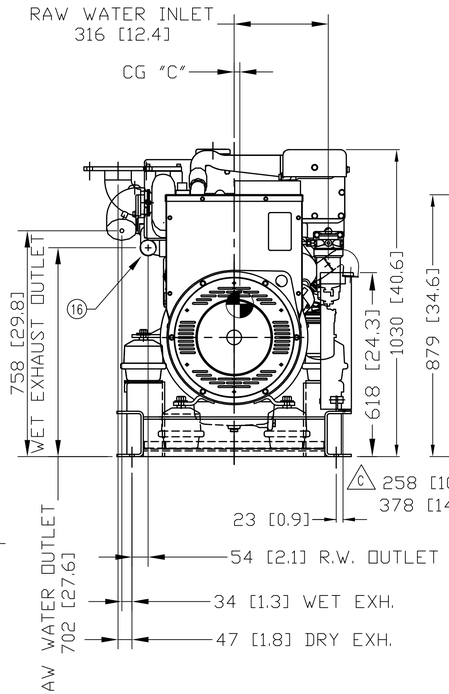

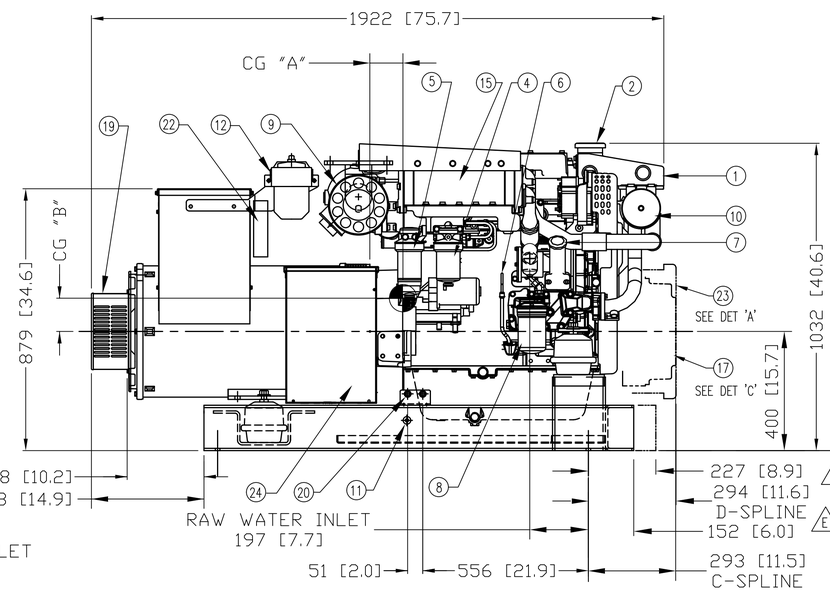

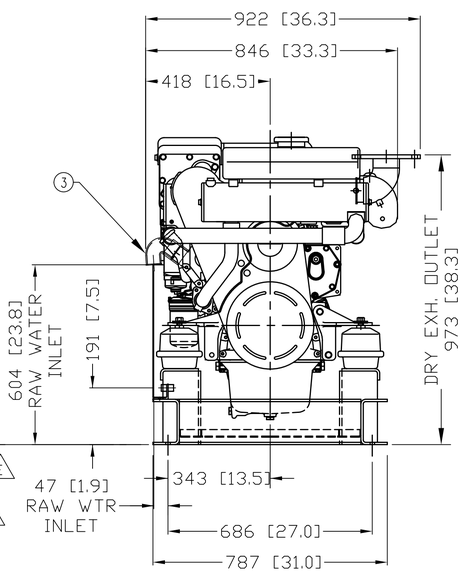

THE DIMENSIONS ON THIS DRAWING ARE SUBJECT TO CHANGE PLEASE CONTACT NORTHERN LIGHTS TO BE SURE YOU HAVE THE MOST CURRENT REVISION.

SYMBOL	DATE	DESCRIPTION	BY	CHECKED
H	3/15/2012	LOCATED D.C. JUNCTION BOX. ECN# 2019.	MG	TH
G	3/30/2011	CORRECTED SAE D-PAD SPLINE DIA; WAS 1.5". FILED UNDER ECN#1645.	LTP	MG 3/30/2011
F	11/3/09	UPDATED ARRGT TO INCLUDE STD EQUIPMENT, ADJUST WEIGHT.	LTP	
E	9/14/09	ADDED OPTIONAL D SPLINE PTO	LTP	
D	5/20/08	CORRECTED OUTPUT RATING FOR M1064H.11, DELETE PTO SAE-B PAD	LTP	
C	6/7/04	ADDED DIMS AND REFERENCE TO DAL WITH/WITHOUT PMG	LTP	
B	04/15/04	MOVED FUEL MANIFOLD	BW	
A	2/18/04	ADDED DAL WITH PTO OPTION.	LTP	

WEBSITE DRAWING

NORTHERN LIGHTS
4420 14th AVE. N.W.
Seattle, WA 98107
(206) 789-3880
www.northern-lights.com

DRAWN: LTP 02/09/04
CHECKED:
SCALE: 1:10
RELEASED:
SHEETS: 1 OF 1
UNITS OF MEASURE: MM[INCH]

TITLE: INSTALLATION DIMENSIONS
M1064H – HYDROLASTIC MOUNT

P/N:
DWG. NO: D–3674
REV: H