ITEM	DESCRIPTION	ITEM	DESCRIPTION
1	RAW WATER INLET Ø 2.0" H.B.)	14	ENGINE OIL FILL
2	HEAT EXCHANGER	15	FUEL RETURN PORT (3/8" NPT)
3	COOLANT FILL	16	FUEL SUPPLY PORT (3/8" NPT)
4	AFTERCOOLER	17	OIL DRAIN PORT (1/2" NPT)
5	OPT. DRY EXHAUST ELBOW (Ø 4.0")	18	ALTERNATOR
6	ELECTRIC STARTER	19	DC JUNCTION BOX
7	EXPANSION TANK	20	RAW WATER PUMP
8	THERMOSTAT HOUSING	21	BELT GUARD
9	FUEL/ WATER SEPARATOR	22	RAW WATER OUTLET Ø 2" H.B.)
10	FUEL FILTER	23	OPT. WET EXHAUST ELBOW Ø 5" H.B.)
11	OIL FILTER	24	DRIP PAN DRAIN PORT (3/8" NPT)
12	AIR & COALESCING FILTER		
13	ENGINE OIL DIPSTICK		

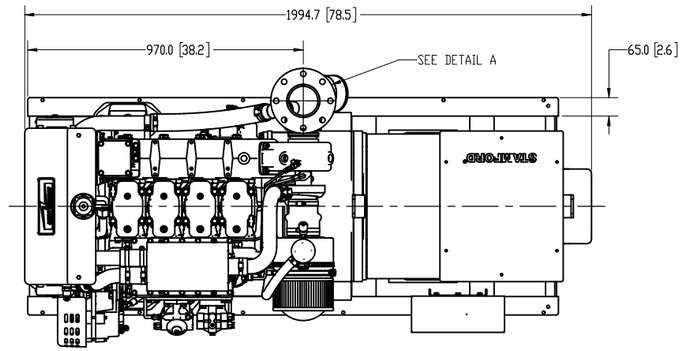

TOP VIEW

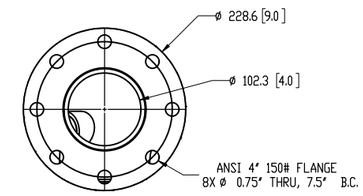

DETAIL A
OPTIONAL DRY EXHAUST FLANGE
SCALE 1 : 4

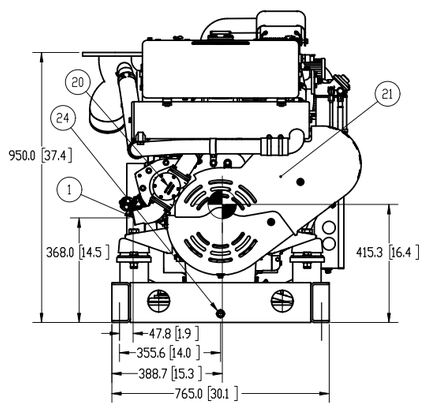

FRONT VIEW

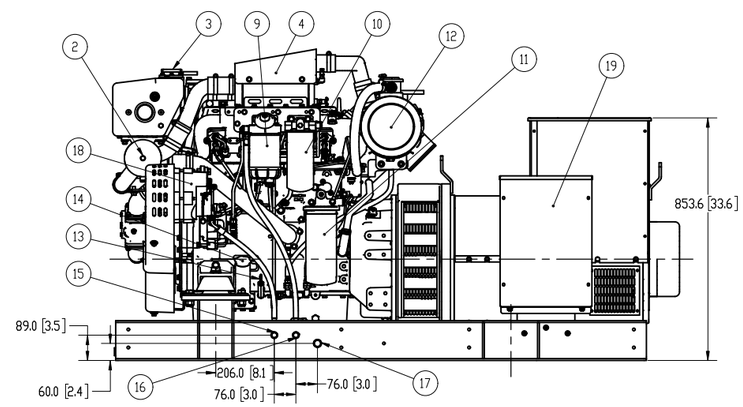

SERVICE SIDE (LEFT) VIEW

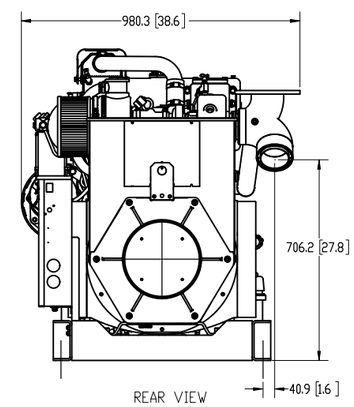

REAR VIEW

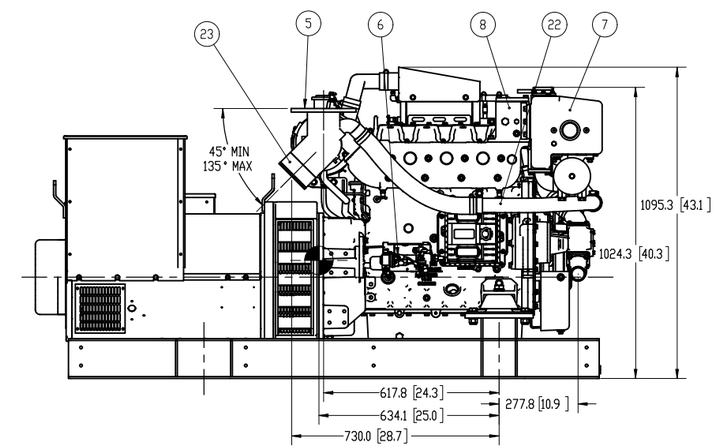

RIGHT VIEW

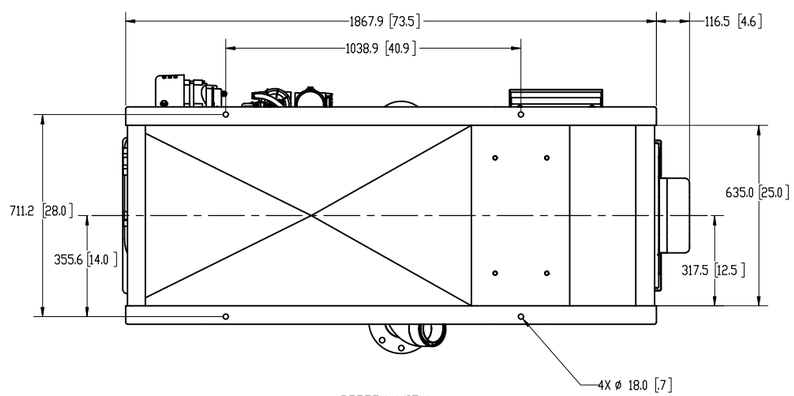

BOTTOM VIEW

NOTES: WEIGHT VALUES ARE APPROXIMATIONS. SHIPPING WEIGHT INCLUDES OIL BUT NO COOLANT. WET WEIGHT INCLUDES OIL AND COOLANT. VALUES ARE SUBJECT TO CHANGE. CONTACT NLI TO BE SURE YOU HAVE THE LATEST REVISION.

MODEL	DESCRIPTION	SHIPPING WEIGHT. LBS [KG]	WET WEIGHT. LBS [KG]
M4105H1.1S	160KW @ 1800 RPM (60HZ), HEAT EXCHANGED	3092 [1402]	3182 [1443]

THIRD ANGLE PROJECTION

PROPRIETARY AND CONFIDENTIAL
THE INFORMATION CONTAINED IN THIS DRAWING IS THE SOLE PROPERTY OF NORTHERN LIGHTS. ANY REPRODUCTION IN PART OR AS A WHOLE WITHOUT THE WRITTEN PERMISSION OF NORTHERN LIGHTS IS PROHIBITED.

UNLESS OTHERWISE SPECIFIED
DIMENSIONS ARE IN MILLIMETERS
TOLERANCES:
ANGULAR:
MACH ± 0.5° BEND ± 1.0°
X ± 0.5
XX ± 0.3
INTERPRET GEOMETRIC TOLERANCING PER: ASME Y14.5M
MATERIAL
FINISH
DO NOT SCALE

	NAME	DATE
DRAWN	JDH	4/10/26
CHECKED	TAH	4/10/26
ENG APPR.		
MFG APPR.		
QA		

COMMENTS:

NORTHERN LIGHTS
4420 14th AVE. N.W.
Seattle, WA 98107
(206) 789-3880
www. northern-lights.com

TITLE:
INSTALLATION DIMENSIONS
M4105H1.1S HEAT EXCHANGED

SIZE	PART NO.	DWG. NO.	REV
D	M4105H1.1S	D-5691	

SCALE: 1:10 | WEIGHT: NOTED IN TABLE | SHEET 1 OF 1

REV	
D	D-5691